BC2000TA Manual

1. Product Characteristics

1.1. Suitable for drive speed regulation of 0.05 ~ 1.5KW DC brush motor
1.2. The minimum speed, maximum speed, acceleration time and torque can be adjusted by potentiometer
1.3. Adjustment speed of external potentiometer (0-90v or 0-180vdc adjustable)
1.4. Equipped with load compensation potentiometer, which can improve the speed stability accuracy
1.5. Current limiting protection and current feedback
1.6. Delay start, remote start
1.7. Speed measurement feedback(If you need to use it, please consult sales support in advance.)
1.8. it can be driven by DC voltage, and the signal must be isolated (the isolation expansion board BC11 or BC15 can be added)

2. Warnings

2.1. Please confirm that the voltage range of the input AC power supply is 90 ~ 250VAC(50 / 60Hz) before power on.
2.2. Before power on, please make sure that the maximum output voltage does not exceed the rated voltage of the motor (adjust the max potentiometer).
2.3. Before power on, please make sure that each adjusting potentiometer has been adjusted to the appropriate position (see the adjustment instructions for details).
2.4. Make sure the wiring is correct before power on (see wiring instructions for details).
2.5. Do not touch any element (Electric Hazard) by hand when power on, and do not touch the components immediately after power off (Some components will be hot even in normal operation).

3. Wiring Instructions

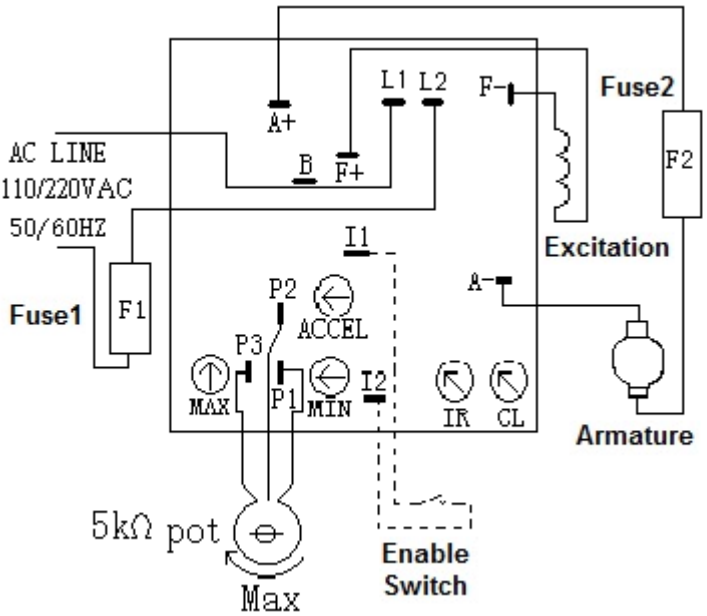

Wiring Diagram

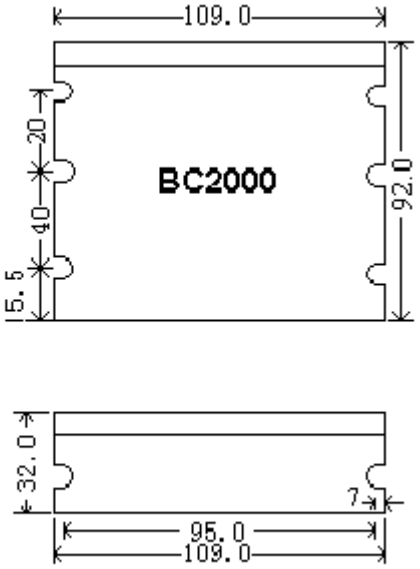

Dimension Diagram（mm）

3.1. **L1** and **L2** are AC power input terminals.
3.2. **A +** and **A-** are armature voltage output terminals of DC brush motor.
3.3. **F+** and **F-** are DC motor excitation voltage output terminals. (when driving permanent magnet motor, **F+** and **F-** may not be connected)
3.4. **P1**, **P2** and **P3** are input terminals of output control potentiometer. (please confirm that the central tap of the adjustable potentiometer is connected to **P2**)
3.5. **I1** and **I2** are output stop enable switches. (i.e. when **I1** and **I2** are short circuited, the output is zero, which can not be connected)
3.6. **B** and **I2** are speed measurement feedback input terminals.

4. Electrical Parameters

Input Voltage（VAC）50/60Hz	Output Voltage（VDC）	without additional heat sink		Add enough large area heat sink	
		Maximum DC Output Current（Amps）	Maximum Output Power KW（HP）	Maximum DC Output Current（Amps）	Maximum Output Power KW（HP）
90--130	0--90	6.0	0.375 （0.5）	12.0	0.75 （1）
185--250	0--180		0.75 （1）		1.5 （2）

4.1.Speed Regulation Ratio 50:1

4.2.Current Limiting Range 0－150%

4.3.Load Adjustment Rate 1%

4.4.Acceleration Time 0.5－4.0s

4.5.Min Speed Adj. Range 0－30%

4.6.Max Speed Adj. Range 50－110%

4.7.Line Voltage Regulation 0.5%

4.8.Control Linearity 2%

4.9.Speed Measurement Feedback Voltage 0－5 /krpm(Optional)

4.10.Max Instantaneous Starting 3 times of current setting

4.11.Max Ambient Temperature 45℃(Full Load)

5. Adjustment Instructions (*all adjustment potentiometers are the minimum value when they are rotated to the full counterclockwise position *)

5.1.Maximum Speed Adjustment (**MAX**)

When the maximum speed of the motor is required to be a specific speed, the maximum speed of the potentiometer can be adjusted to meet the control requirements. The adjustable range is 50% - 110% of the rated speed. (that is, the maximum output DC voltage is set, and the factory setting is 180VDC)

5.2.Minimum Speed Adjustment (**MIN**)

When the motor is required to be adjusted from non-zero speed, adjust the potentiometer to meet the minimum speed requirements. The adjustable range is 0-30% of the rated speed.

5.3.Current Limit Adjustment (**CL**)

The potentiometer can adjust the maximum output current. The adjustable range of 1.5KW output is 0-150% of the rated current of the motor. (this function can be used as overload protection or torque adjustment of motor).

5.4.Current feedback adjustment (**IR**)

a) When the load change on the line is small, the potentiometer can be adjusted to the minimum value.

b) When it is required to keep the speed change less than 1% when the load on the line changes greatly, the potentiometer can be adjusted according to the following steps:

- When the motor is no-load, measure the armature voltage of the motor at this time.
- Adjust the line to full load, and the armature voltage of the motor will decrease.
- Adjust the potentiometer anticlockwise to restore the armature voltage of the motor to no-load voltage.

6. Fuse Selection Table In Line (F1 and F2)

90VDC Motor Power（W）	50	100	150	250	375	500	600	750
180VDC Motor Power（W）	100	200	300	500	750	1000	1200	1500
F1（A）	1.5	3	5	8	12	16	20	24
F2（A）	0.8	1.5	3	4	6	8	10	12

7. Fault Analysis

7.1. The DC motor is not running.

a) The fuse is broken, and it is still broken after replacement.

- Rectifier module breakdown.
- Thyristor module breakdown.
- Motor coil short circuit.
- Motor load is too large.

b) The fuse is normal.

- Open circuit or poor contact of the line.
- The control integrated circuit is damaged. (Return to factory for repair)

7.2. The speed of the DC motor is abnormal.

- The current feedback potentiometer is not set properly.
- Component performance changes or damages.(Return to factory for repair)